MR2B3-19-12

OHIO

OH-1 (Rev. 1/99)

Traffic Crash Report

TRAFFIC CRASH REPORT

CRASH REPORT #	CRASH SEVERITY	PRIVATE PROPERTY	HIT / SKIP	PHOTOS TAKEN	OH-2	OH-3	OH-1P	OTHER
12MPD 0447	2 (1 FATAL ERROR 3 PDO 2 INJURY 4 UNKNOWN)	☐ "X" IF YES	1 (1 NOT HIT / SKIP 2 SOLVED 3 NOT SOLVED)	X "X" IF YES	☐	☐	☐	☐

N.C.I.C. #	REPORTING AGENCY	# UNITS	UNIT ERROR	DATE OF CRASH
03801	MILLERSBURG POLICE DEPARTMENT	2	01 (98 ANIMAL 99 UNKNOWN)	03/16/2012

TIME OF CRASH	DAY OF WEEK	CITY/VILLAGE/TOWNSHIP	NAME (OF CITY, VILLAGE OR TOWNSHIP)	COUNTY #	LATITUDE	LONGITUDE
20:14	FRI	VILLAGE	MILLERSBURG	38	40323605	081550006

CRASH OCCURRED ON

PREFIX	CRASH LOCATION	TYPE LOC
S	WASHINGTON STREET	1

TYPE LOCATION POINT USED: 1 NAMED STREET 2 NUMBERED STREET 3 NUMBERED ROUTE

LOCAL INFORMATION

AT/REFERENCE

DIST. REF.	DIR	PREFIX	REFERENCE	REF POINT
		S	000960 WASHINGTON STREET	04

REFERENCE POINT USED: 01 STATE LINE 02 INTERSECTION OF TWO STREETS 03 COUNTY LINE 04 HOUSE NUMBER 05 TOWNSHIP BOUNDARY 06 MILE POST 07 CORPORATION LIMIT 08 PLACE NAME WITHOUT REFEREN 09 DRIVEWAY 10 STREET OR ROUTE WITHOUT REFERENCE

MOTORIST/NON-MOTORIST

A — UNIT # 01 — # OF OCC 2 — NAME (LAST,FIRST,MIDDLE): FLEMING CODY J

ADDRESS (STREET, CITY, STATE, ZIP-CODE): 1074 PATRICK DRIVE GAYLORD MI 49735

SOCIAL SECURITY NUMBER	DATE OF BIRTH	AGE	SEX	HOME PHONE #	WORK PHONE #
	04/07/1992	19	M	(989)619-5261	

DL STATE	DL #	LP STATE	LP #	INJURED TAKEN BY	TRANSPORTED BY	INJURED TAKEN TO
MI	F-455-122-435-2	MI	CGA8707	1 (1 NONE 2 EMS 3 POLICE 4 OTHER 5 UNKNOWN)		

OWNER NAME (IF SAME, WRITE "SAME")	OWNER ADDRESS (STREET, CITY, STATE, ZIP-CODE)
JORDAN W STAUFFER	11378 FANTASY DRIVE FREDERIC MI 49733

YEAR	MAKE	MODEL	COLOR	INSURANCE COMPANY	TOWING SERVICE	OWNER PHONE #
2009	CHEVROLE	MALIBU	SILVER	PROGRESSIVE	K & N TOWING	(989)619-8663

OFFENSE CHARGED	OFFENSE DESCRIPTION	CITATION #	LOCAL CODE
331.22	RIGHT OF WAY ON PUBLIC HIGHWAYS	10953	X ("X" IF YES)

B — UNIT # 02 — # OF OCC 2 — NAME (LAST,FIRST,MIDDLE): BEACH TRAVIS H

ADDRESS (STREET, CITY, STATE, ZIP-CODE): 10240 CR292 KILLBUCK OH 44637

SOCIAL SECURITY NUMBER	DATE OF BIRTH	AGE	SEX	HOME PHONE #	WORK PHONE #
	06/04/1981	30	M	(330)473-8031	

DL STATE	DL #	LP STATE	LP #	INJURED TAKEN BY	TRANSPORTED BY	INJURED TAKEN TO
OH	RV079198	OH	DXL1547	2 (1 NONE 2 EMS 3 POLICE 4 OTHER 5 UNKNOWN)	HOLMES FIRE DIST.	JOEL POMERENE HOSPI

OWNER NAME (IF SAME, WRITE "SAME")	OWNER ADDRESS (STREET, CITY, STATE, ZIP-CODE)
BEACH, TRAVIS H	10240 CR292 KILLBUCK OH 44637

YEAR	MAKE	MODEL	COLOR	INSURANCE COMPANY	TOWING SERVICE	OWNER PHONE #
1997	FORD	F-SERIES P	MAROON	PROGRESSIVE	K & N TOWING	(330)473-8031

OFFENSE CHARGED	OFFENSE DESCRIPTION	CITATION #	LOCAL CODE
			☐ ("X" IF YES)

OCCUPANT

C — UNIT # 01 — NAME (LAST,FIRST,MIDDLE): STAUFFER JORDAN W

HOME PHONE #	DATE OF BIRTH	AGE	SEX
(989)619-8663	09/10/1990	21	M

ADDRESS (STREET, CITY, STATE, ZIP-CODE)	INJURED TAKEN BY	TRANSPORTED BY	INJURED TAKEN TO
11378 FANTSY DRIVE FREDERIC MI 49733	1 (1 NONE 2 EMS 3 POLICE 4 OTHER 5 UNKNOWN)		

D — UNIT # 02 — NAME (LAST,FIRST,MIDDLE): BEACH JACKIE R

HOME PHONE #	DATE OF BIRTH	AGE	SEX
(330)275-4329	07/06/1988	23	F

ADDRESS (STREET, CITY, STATE, ZIP-CODE)	INJURED TAKEN BY	TRANSPORTED BY	INJURED TAKEN TO
10240 CR292 KILLBUCK OH 44637	2 (1 NONE 2 EMS 3 POLICE 4 OTHER 5 UNKNOWN)	HOLMES FIRE DIST. #1	JOEL POMERENE HOSPITAL

	SEATING POSITION	SAFETY EQUIPMENT	AIR BAG	AIR BAG SWITCH	EJECTION	TRAPPED	INJURIES
A	01	04	3	4	1	1	3
B	01	04	2	1	1	1	3
C	03	04	1	4	1	1	1
D	03	04	1	3	1	1	3

SEATING POSITION: 01 FRONT - LEFT (MC DRIVER) 02 FRONT - MIDDLE 03 FRONT - RIGHT 04 SECOND - LEFT (MC PASS) 05 SECOND - MIDDLE 06 SECOND - RIGHT 07 THIRD - LEFT (MC PASSENGER/SIDE CAR) 08 THIRD - MIDDLE 09 THIRD - RIGHT 10 SLEEPER SECTION OF CAB 11 ENCLOSED CARGO AREA 12 UNENCLOSED CARGO AREA 13 TRAILING UNIT 14 EXTERIOR 15 OTHER 18 NON-MOTORIST 17 UNKNOWN

SAFETY EQUIPMENT: MOTORIST 01 NONE USED 02 SHOULDER BELT ONLY USED 03 LAP BELT ONLY USED 04 SHOULDER AND LAP BELT USED 05 CHILD SAFETY SEAT USED 06 HELMET USED 07 RESTRAINT USE UNKNOWN; NON-MOTORIST 08 NONE USED 09 HELMET USED 10 PROTECTIVE PADS 11 REFLECTIVE CLOTHING 12 LIGHTING 13 OTHER 14 UNKNOWN

AIR BAG: 1 NOT-DEPLOYED 2 DEPLOYED - FRONT 3 DEPLOYED - SIDE 4 DEPLOYED BOTH FRONT/SIDE 5 NOT APPLICABLE 6 DEPLOYMENT UNKNOWN

AIR BAG SWITCH: 1 ON-OFF SWITCH NOT PRESENT 2 SWITCH IN ON POSITION 3 SWITCH IN OFF POSITION 4 UNKNOWN POSITION

EJECTION: 1 NOT EJECTED 2 TOTALLY EJECTED 3 PARTIALLY EJECTED 4 NOT APPLICABLE 5 UNKNOWN

TRAPPED: 1 NOT TRAPPED 2 EXTRICATED BY MECHANICAL MEANS 3 FREED BY NON-MECHANICAL MEANS 4 UNKNOWN

INJURIES: 1 NO INJURY 2 POSSIBLE 3 NON-INCAPACITATING 4 INCAPACITATING 5 FATAL INJURY 6 UNKNOWN

BLANK FOR WITNESS

☐ SUPPLEMENT 'X' IF YES

UNIT NUMBERS

A 01 B 02

NON-MOTORIST LOCATION

A [ ] B [ ]

01 MARKED CROSSWALK AT INTERSECTION
02 AT INTERSECTION BUT NO CROSSWALK
03 NON-INTERSECTION CROSSWALK
04 DRIVEWAY ACCESS CROSSWALK
05 IN ROADWAY
06 NOT IN ROADWAY
07 MEDIAN (BUT NOT ON SHOULDER)
08 ISLAND
09 SHOULDER
10 SIDEWALK
11 WITHIN 10 FEET OF ROADWAY (BUT NO SHOULDER, MEDIAN, SIDEWALKE, OR ISLAND)
12 BEYOND 10 FEET OF ROADWAY (WITHIN TRAFFICWAY)
13 OUTSIDE TRAFFICWAY
14 SHARED USE PATHS OR TRAILS
15 UNKNOWN

TYPE OF UNIT

A 04 B 07

MOTORIST
01 SUB-COMPACT
02 COMPACT
03 MID SIZED
04 FULL SIZE
05 MINIVAN
06 SPORT UTILITY VEHICLE
07 PICKUP
08 PANEL/VAN
09 SINGLE UNIT TRUCK; 2 AXLES, 6 TIRES
10 SINGLE UNIT TRUCK; 3 OR MORE AXLES
11 TRUCK/TRAILER
12 TRUCK TRACTOR (BOBTAIL)
13 TRACTOR/SEMI-TRAILER
14 TRACTOR/DOUBLE - SHORT
15 TRACTOR DOUBLE - LONG
16 FIFTH WHEEL OR CONVERTER DOLLY
17 TRACTOR/TRIPLES
18 MOTORCYCLE
19 MOTORIZED BICYCLE
20 SCHOOL BUS
21 CHURCH BUS
22 PUBLIC BUS
23 OTHER BUS
24 POLICE VEHICLE
25 FIRE TRUCK
26 AMBULANCE/RESCUE
27 TAXI
28 MOTOR HOME
29 TRAIN
30 FARM VEHICLE
31 FARM EQUIPMENT
32 SNOWMOBILE
33 CONSTRUCTION EQUIPMENT
34 ALL OTHERS
NON-MOTORIST
35 ANIMAL W/RIDER
36 ANIMAL W/BUGGY
37 BICYCLE
38 PEDESTRAIN
39 PEDALCYCLIST (BICYCLE, TRICYCLE, UNICYCLE, PEDAL CAR)
40 SKATER
41 OTHER-NON MOTORIST (WHEELCHAIR, ETC)
42 UNKNOWN

IN EMERGENCY RESPONSE

A 1 B 1

1 NO
2 YES
3 UNKNOWN

DAMAGE SCALE

A 4 B 4

1 NONE
2 NON-FUNCTIONAL
3 FUNCTIONAL DAMAGE
4 DISABLING DAMAGE
5 SEVERE
6 UNKNOWN

DAMAGE AREA

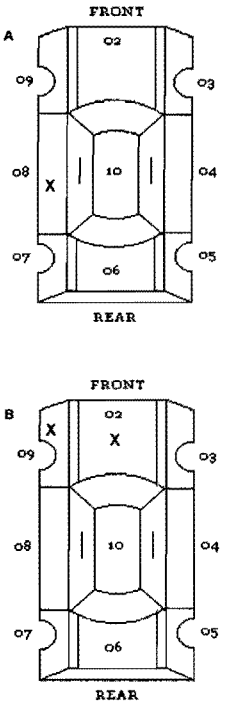

MOST DAMAGED AREA

A 08 B 02

01 NONE
02 CENTER FRONT
03 RIGHT FRONT
04 RIGHT SIDE
05 RIGHT REAR
06 REAR CENTER
07 LEFT REAR
08 LEFT SIDE
09 LEFT FRONT
10 TOP AND WINDOWS
11 UNDERCARRIAGE
12 LOAD /TRAILER
13 TOTAL (ALL AREAS)
14 OTHER
15 UNKNOWN

POINT OF IMPACT

A 08 B 02

01 NONE
02 CENTER FRONT
03 RIGHT FRONT
04 RIGHT SIDE
05 RIGHT REAR
06 REAR CENTER
07 LEFT REAR
08 LEFT SIDE
09 LEFT FRONT
10 TOP AND WINDOWS
11 UNDERCARRIAGE
12 LOAD /TRAILER
13 TOTAL (ALL AREAS)
14 OTHER
15 UNKNOWN

ACTION

A 4 B 3

1 NON-CONTACT
2 NON-COLLISION
3 STRICKING
4 STRUCK
5 BOTH STRICKING AND STRUCK
6 UNKNOWN

STRIKING VEHICLE OVERRIDE/UNDERRIDE

A 1 B 1

1 NO UNDERRIDE OR OVERRIDE
2 UNDERRIDE, COMPARTMENT INTRUSION
3 UNDERRIDE, NO COMPARTMENT INTRUSION
4 UNDERRIDE, COMPARTMENT INTRUSION UNKNOWN
5 OVERRIDE, MOTOR VEHICLE IN TRANSPORT
6 OVERRIDE, OTHER VEHICLE
7 UNKNOWN IF UNDERRIDE OR OVERRIDE

PRE-CRASH ACTIONS

A 08 B 01

MOTORIST
01 MOVEMENTS ESSENTIALLY STRAIGHT AHEAD
02 BACKING
03 CHANGING LANES
04 OVERTAKING/PASSING
05 TURNING RIGHT
06 TURNING LEFT
07 MAKING U-TURN
08 ENTERING TRAFFIC LANE
09 LEAVING TRAFFIC LANE
10 PARKED
11 SLOWING OR STOPPED IN TRAFFIC
12 DRIVERLESS
13 OTHER
14 UNKNOWN
NON-MOTORIST
15 ENTERING OR CROSSING SPECIFIED LOCATION
16 WALKING, RUNNING, JOGGING, PLAYING, CYCLING
17 WORKING
18 PUSHING VEHICLE
19 APPROCHING OR LEAVING VEHICLE
20 PLAYING OR WORKING ON VEHICLE
21 STANDING
22 OTHER
23 UNKNOWN

CONTRIBUTING CIRCUMSTANCES

A 02 B 01

MOTORIST
01 NONE
02 FAILURE TO YIELD
03 RAN RED LIGHT OR STOP SIGN
04 EXCEEDED SPEED LIMIT
05 UNSAFE SPEED
06 IMPROPER TURN
07 LEFT OF CENTER
08 FOLLOWED TOO CLOSELY/ACDA
09 IMPROPER LANE CHANGE/DROVE OFF ROAD/IMPROPER PASSING
10 IMPROPER BACKING
11 IMPROPER START FROM PARKED POSITION
12 STOPPED OR PARKED ILLEGALLY
13 OPERATING VEHICLE IN ERRATIC, RECKLESS, CARELESS, NEGLIGENT OR AGGRESSIVE MANNER
14 SWERVING TO AVIOD (DUE TO WIND, SLIPPERY SURFACE, VEHICLE, OBJECT, NON-MOTORIST IN ROADWAY, ETC.)
15 FAILURE TO CONTROL
16 VISION OBSTRUCTION
17 DRIVER INATTENTION
18 FATIGUE/ASLEEP
19 OPERATING DEFECTIVE EQUIPMENT
20 LOAD SHIFTING/FALLING/SPILLING
21 OTHER IMROPER ACTION
22 UNKNOWN
NON-MOTORIST
23 NONE
24 IMPROPER CROSSING
25 DARTING
26 LYING AND/OR ILLEGALLY IN ROADWAY
27 FAILURE TO YEILD RIGHT OF WAY
28 NOT VISIBLE (DARK CLOTHING)
29 INATTENTIVE
30 FAILURE TO OBEY TRAFFIC SIGNS, SIGNALS OR OFFICER
31 WRONG SIDE OF THE ROAD
32 OTHER
33 UNKNOWN

VEHICLE DEFECT CODE ONLY IF '19' SELECTED ABOVE

A [ ] B [ ]

01 TURN SIGNALS
02 HEAD LAMPS
03 TAIL LAMPS
04 BRAKES
05 STEERING
06 TIRE BLOWOUT
07 WORN OR SLICK TIRES
08 TRAILER EQUIPMENT DEFECTIVE
09 MOTOR TROUBLE
10 DISABLED FROM PRIOR ACCIDENT
11 OTHER DEFECTS
12 NO DEFECTS

SEQUENCE OF EVENTS

	A	B
1	20	20
2		
3		
4		

NON-COLLISION
01 OVERTURN/ROLLOVER
02 FIRE/EXPLOSION
03 IMMERSION
04 JACKKNIFE
05 CARGO/EQUIPMENT LOSS OR SHIFT
06 EQUIPMENT FAILURE (BLOWN TIRE, BRAKE FAILURE, ETC)
07 SEPARATION OF UNITS
08 RAN OF ROAD RIGHT
09 RAN OFF ROAD LEFT
10 CROSS MEDIAN/CENTERLINE
11 DOWNHILL RUNAWAY
12 OTHER NON-COLLISION
13 UNKNOWN NON-COLLISION
COLLISION W/PERSON, VEHICLE, OR OBJECT NOT FIXED
14 PEDESTRIAN
15 PEDACYCLE
16 RAILWAY VEHICLE (E.G. TRAIN, ENGINE)
17 ANIMAL - FARM
18 ANIMAL - DEER
19 ANIMAL - OTHER
20 MOTOR VEHICLE IN TRANSPORT
21 PARKED MOTOR VEHICLE
22 WORK ZONE MAINTENANCE EQUIPMENT
23 OTHER MOVABLE OBJECT
24 UNKNOWN MOVABLE OBJECT
COLLISION WITH FIXED OBJECT
25 IMPACT ATTENUATOR/CRASH CUSHION
26 BRIDGE OVERHEAD STRUCTURE
27 BRIDGE PIER OR ABUTMENT
28 BRIDGE PARAPET
29 BRIDGE RAIL
30 GUARDRAIL FACE
31 GUARDRAIL END
32 MEDIAN BARRIER
33 HIGHWAY TRAFFIC SIGN POST
34 OVERHEAD SIGN POST
35 LIGHT/LUMINARIES SUPPORT
36 UTILITY POLE
37 OTHER POST, POLE OR SUPPORT
38 CULVERT
39 CURB
40 DITCH
41 EMBARKMENT
42 FENCE
43 MAILBOX
44 TREE
45 OTHER FIXED OBJECT(WALL, BUILDING, TUNNEL ETC)
46 WORK ZONE MAINTENANCE EQUIPMENT
47 UNKNOWN FIXED OBJECT
48 OTHER
49 UNKNOWN

FIRST HARMFUL EVENT

A 1 B 1

OF THE SEQUENCE OF EVENTS - WHICH ONE IS THE FIRST HARMFUL EVENT (1-4)

MOST HARMFUL EVENT

A 1 B 1

OF THE SEQUENCE OF EVENTS - WHICH ONE IS THE MOST HARMFUL EVENT (1-4)

SPEED DETECTED

A 2 B 2

1 STATED
2 ESTIMATED

SPEED

A 2

B 30

POSTED SPEED

A 35 B 35

TRAFFIC CONTROL

A 12 B 12

01 NO CONTROLS
02 STOP SIGN
03 YIELD SIGN
04 TRAFFIC SIGNAL
05 TRAFFIC FLASHERS
06 SCHOOL ZONE
07 RAILROAD CROSSBUCKS
08 RAILROAD FLASHERS
09 RAILROAD GATES
10 CONSTRUCTION BARRICADE
11 POLICE OFFICER
12 PAVEMENT MARKINGS
13 CROSSWALK LINES
14 WALK/DONT WALK
15 TRAFFIC CONTROL DEVICE INOPERATIVE, MISSING, OBSCURED
16 OTHER
17 NOT REPORTED
18 UNKNOWN

DIRECTION

	FROM	TO		FROM	TO
A	4	3	B	1	2

1 NORTH
2 SOUTH
3 EAST
4 WEST
5 NORTHEAST
6 NORTHWEST
7 SOUTHEAST
8 SOUTHWEST
9 UNKNOWN

CONDITION

A 1 B 1

1 APPARENTLY NORMAL
2 PHYSICAL IMPAIRMENT
3 EMOTIONAL (E.G. DEPRESSED, ANGRY, DISTURBED)
4 ILLNESS
5 FELL ASLEEP, FAINTED, FATIGUED, ETC
6 UNDER THE INFLUENCE OF MEDICATIONS/DRUGS/ALCOHOL
7 OTHER
8 UNKNOWN

ALCOHOL/DRUG SUSPECTED

A 1 B 1

1 NONE
2 YES ALCOHOL SUSPECTED
3 YES-HBD NOT IMPAIRED
4 YES-DRUGS SUSPECTED
5 YES-ALCOHOL AND DRUGS SUSPECTED
6 UNKNOWN

ALCOHOL TEST STATUS

A 1 B 1

1 NONE GIVEN
2 TEST REFUSED
3 TEST GIVEN, CONTAMINATED SAMPLE/UNUSABLE
4 TEST GIVEN, RESULTS KNOWN
5 TEST GIVEN, RESULTS UNKNOWN
6 UNKNOWN

ALCOHOL TEST TYPE

A 1 B 1

1 NONE
2 BLOOD
3 URINE
4 BREATH
5 OTHER

ALCOHOL TEST RESULT

A [ ]

B [ ]

DRUG TEST STATUS

A 1 B 1

1 NONE GIVEN
2 TEST REFUSED
3 TEST GIVEN, CONTAMINATED SAMPLE/UNUSABLE
4 TEST GIVEN, RESULTS KNOWN
5 GIVEN, RESULTS UNKNOWN
6 UNKNOWN

DRUG TEST TYPE

A 1 B 1

1 NONE
2 BLOOD
3 URINE
4 OTHER

DRUG TEST 1 & 2 RESULT

	1	2		1	2
A	1	1	B	1	1

1 NONE
2 MARIJUANA
3 COCAINE
4 OPIATES
5 AMPHETAMINES
6 PCP
7 OTHER
8 UNKNOWN AT TIME OF REPORTING

TYPE OF INTERSECTION

10

01 NOT AN INTERSECTION
02 FOUR-WAY INTERSECTION
03 T-INTERSECTION
04 Y-INTERSECTION
05 TRAFFIC CIRCLE/ROUNDABOUT
06 FIVE-POINT, OR MORE
07 ON RAMP
08 OFF RAMP
09 CROSSOVER
10 DRIVEWAY
11 RAILWAY GRADE CROSSING
12 SHARED-USE PATHS OR TRAILS
13 UNKNOWN

OCCURRENCE

1

1 ON ROADWAY
2 ON SHOULDER
3 IN MEDIAN
4 ON ROADSIDE
5 ON GORE
6 OUTSIDE TRAFFICWAY
7 UNKNOWN

ROAD CONTOUR

1

1 STRAIGHT LEVEL
2 STRAIGHT GRADE
3 CURVE LEVEL
4 CURVE GRADE
5 UNKNOWN

ROAD CONDITIONS

PRIMARY	SECONDARY
01	

01 DRY
02 WET
03 SNOW
04 ICE
05 SAND/MUD/DIRT/OIL/GRAVEL
06 WATER (STANDING, MOVING)
07 SLUSH
08 DEBRIS
09 RUT, HOLES, BUMPS, UNEVEN PAVEMENT
10 OTHER
11 UNKNOWN

[ ] SUPPLEMENT 'X' IF YES

LOCAL REPORT #
12MPD 0447

NARRATIVE

UNIT NUMBER TWO WAS SOUTHBOUND ON WASHINGTON STREET WHEN UNIT NUMBER ONE ENTERED THE ROADWAY FRO PRIVATE DRIVEWAY OFF THE WEST SIDE OF THE ROADWAY. UNIT NUMBER ONE WAS UNABLE TO AVOID UNIT NUMBER TWO AND STRUCK IT ON IT'S DRIVERS SIDE.

MANNER OF COLLISION OR IMPACT

6

1 NOT COLLISION BETWEEN TWO VEHICLES IN TRANSPORT
2 REAR-END
3 HEAD-ON
4 REAR-TO-REAR
5 BACKING
6 ANGLE
7 SIDESWIPE SAME DIRECTION
8 SIDESWIPE OPPOSITE DIRECTION
9 UNKNOWN

SCHOOL BUS RELATED

1

1 NO
2 YES, DIRECTLY INVOLVED
3 YES, INDIRECTLY INVOLVED
4 UNKNOWN

WORK ZONE RELATED

1

1 NO
2 YES
3 UNKNOWN

WEATHER

01

01 CLEAR
02 CLOUDY
03 FOG/SMOG/SMOKE
04 RAIN
05 SLEET/HAIL (FREEZING RAIN OR DRIZZLE)
06 SNOW
07 SEVERE CROSSWINDS
08 BLOWING SAND/SOIL/DIRT/SNOW
09 OTHER
10 UNKNOWN

TYPE OF WORK ZONE

1 LANE CLOSURE
2 LANE SHIFT/CROSSOVER
3 WORK ON SHOULDER OR MEDIAN
4 INTERMITTENT OR MOVING WORK
5 OTHER

LIGHT CONDITIONS

PRIMARY 4 SECONDARY

1 DAYLIGHT
2 DAWN
3 DUSK
4 DARK - LIGHTED ROADWAY
5 DARK - ROADWAY NOT LIGHTED
6 DARK - UNKNOWN ROADWAY LIGHTING
7 GLARE
8 OTHER
9 UNKNOWN

LOCATION OF CRASH IN WORK ZONE

1 BEFORE THE FIRST WORK ZONE WARNING SIGN
2 ADVANCE WARNING AREA
3 TRANSITION AREA
4 ACTIVITY AREA

WORKERS PRESENT

1 NO
2 YES
3 UNKNOWN

DIAGRAM

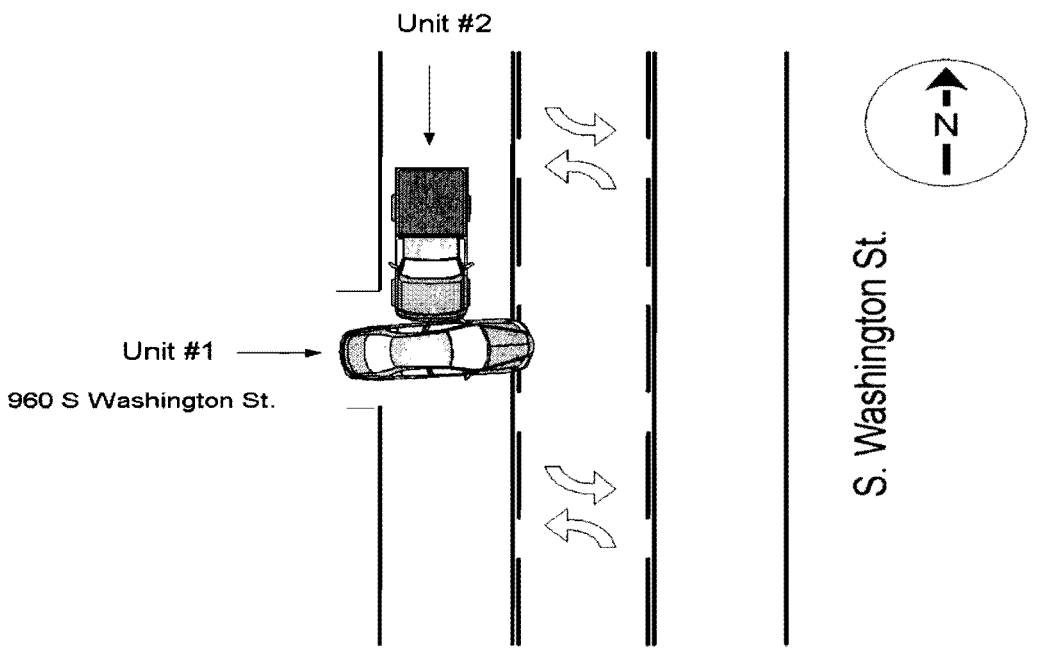

TRUCK/BUS

UNIT #

THE CRASH INVOLVED ONE OR MORE OF THE FOLLOWING:
A TRUCK (MOTOR VEHICLE) WITH A GVWR MORE THAN 10,000 POUNDS; OR
A TRUCK (MOTOR VEHICLE) WITH A HAZARDOUS MATERIALS PLACARD; OR
A BUS DESIGNED FOR AT LEAST 8 PERSONS, INCLUDING DRIVER

AND

THE CRASH RESULTED IN ONE OF THE FOLLOWING
A FATALITY, OR
AN INJURY REQUIRING TRANSPORTATION OR IMMEDIATE MEDICAL TREATMENT, OR
AT LEAST ONE VEHICLE WAS TOWED DUE TO DISABLING DAMAGE OR REQUIRED INTERVENING ASSISTANCE BEFORE PROCEEDING UNDER ITS OWN POWER

COMPANY (FROM SHIPPING PAPERS)

COMPANY PHONE

ADDRESS (STREET, CITY, ST, ZIP CODE)

US DOT	ICC MC	PUCO	TRAILER LP ST.	TRAILER LP YEAR	TRAILER LP #	PLACARD #	# DIA

CARGO BODY TYPE

01 NOT APPLICABLE
02 BUS (9-15 INCLUDING DRIVER)
03 VAN/ENCLOSED BOX
04 GRAIN/CHIPS/GRAVEL/WN
05 POLE
06 CARGO TANK
07 FLATBED
08 DUMP
09 CONCRETE MIXER
10 AUTO TRANSPORTER
11 GARBAGE/REFUSE
12 OTHER
13 UNKNOWN

WEIGHT (GVWR)

1 LESS/EQUAL 10,000
2 10,001 - 26,000
3 MORE THAN 26,000

CDL CLASS

1 CLASS A
2 CLASS B
3 CLASS C
4 CLASS D
5 CLASS E

HAZARDOUS MATERIALS PLACARD

1 NO
2 YES
3 UNKNOWN

HAZARDOUS MATERIALS RELEASED

1 NO 4 UNKNOWN
2 YES
3 NOT APPLICABLE

POLICE ACTION

DATE CRASH REPORTED	TIME REC CALL	DISPATCH	ARRIVED	CLEARED	OTHER	TOTAL MINUTES
03/16/2012	20:15	20:15	20:20	21:26	30	101

OFFICER'S NAME	BADGE #	CHECKED BY	DATE REPORT FILED
PTL. KIM HERMAN	101		03/16/2012

REPORT TAKEN BY: 1 (1 POLICE AGENCY, 2 MOTORIST, 3 UNKNOWN)

REPORT TAKEN AT: 1 (1 SCENE, 2 STATION, 3 OTHER)

SUPPLEMENT 'X' IF YES

LOCAL REPORT #: 12MPD 0447