10-10-16 SLS

TRAFFIC CRASH REPORT

OHLEIS

Local Information	Local Report Number	Crash Severity	Hit/Skip
16MPD1755	16 MPD 1755	3 (1 - Fatal, 2 - Injury, 3 - PDO)	2 (1 - Solved, 2 - Unsolved)

Photos Taken	PDO Under State Reportable Dollar Amount	Private Property	Reporting Agency NCIC *	Reporting Agency Name *	Number of Units	Unit in Error
■ OH-2 ☐ OH-1P ☐ OH-3 ☐ Other	☐	■	03801	Millersburg Police Department	1	1 (98 - Animal, 99 - Unknown)

County *	City / Village / Township *	Crash Date *	Time of Crash	Day of Week
Holmes	☐ City ■ Village ☐ Township: Millersburg	10/05/2016	1136	Wed

Degrees/Minutes/Seconds Latitude	Longitude	OR	Decimal Degrees Latitude	Longitude
40:33:16.08	81:55:43.06			

Roadway Division	Divided Lane Direction of Travel	Number of Thru Lanes	Road Types or Milepost
☐ Divided ■ Undivided	N - Northbound, S - Southbound, E - Eastbound, W - Westbound	2	AL - Alley, AV - Avenue, BL - Boulevard, CR - Circle, CT - Court, DR - Drive, HE - Heights, HW - Highway, LA - Lane, MP - Milepost, PK - Parkway, PI - Pike, PL - Place, RD - Road, SQ - Square, ST - Street, TE - Terrace, TL - Trail, WA - Way

Location Route Number	Loc Prefix	Location Road Name	Location Road Type	Route Types
Location Route Type	N, S, E, W	Private Property	ST	IR - Interstate Route (inc. turnpike), US - US Route, SR - State Route, CR - Numbered County Route, TR - Numbered Township Route

Distance From Reference	Dir From Ref	OF	Reference Route Number	Ref Prefix	Reference Name (Road, Milepost, House #)	Reference Road Type
☐ Miles ☐ Feet ☐ Yards	N, S, E, W		Route Type	N, S, E, W	8490 SR 39	

Reference Point Used	Crash Location	Intersection Related	Location Of First Harmful Event
3 (1 - Intersection, 2 - Mile Post, 3 - House Number)	01 (01 - Not an Intersection, 02 - Four-Way Intersection, 03 - T-Intersection, 04 - Y-Intersection, 05 - Traffic Circle/ Roundabout, 06 - Five-Point, or More, 07 - On Ramp, 08 - Off Ramp, 09 - Crossover, 10 - Driveway/ Alley Access, 11 - Railway Grade Crossing, 12 - Shared-Use Paths or Trails, 99 - Unknown)	☐ Intersection Related	6 (1 - On Roadway, 2 - On Shoulder, 3 - In Median, 4 - On Roadside, 5 - On Gore, 6 - Outside Trafficway, 9 - Unknown)

Road Contour	Road Conditions Primary	Secondary
1 (1 - Straight Level, 2 - Straight Grade, 3 - Curve Level, 4 - Curve Grade, 9 - Unknown)	01 (01 - Dry, 02 - Wet, 03 - Snow, 04 - Ice, 05 - Sand, Mud, Dirt, Oil, Gravel, 06 - Water (Standing, Moving), 07 - Slush, 08 - Debris *, 09 - Rut, Holes, Bumps, Uneven Pavement*, 10 - Other, 99 - Unknown)	

*Secondary Condition Only

Manner of Crash Collision/Impact	Weather
1 (1 - Not Collision Between Two Motor Vehicles In Transport, 2 - Rear-End, 3 - Head-On, 4 - Rear-to-Rear, 5 - Backing, 6 - Angle, 7 - Sideswipe, Same Direction, 8 - Sideswipe, Opposite Direction, 9 - Unknown)	1 (1 - Clear, 2 - Cloudy, 3 - Fog, Smog, Smoke, 4 - Rain, 5 - Sleet, Hail, 6 - Snow, 7 - Severe Crosswinds, 8 - Blowing Sand, Soil, Dirt, Snow, 9 - Other/Unknown)

Road Surface	Light Conditions Primary	Secondary	School Zone Related	School Bus Related
1 (1 - Concrete, 2 - Blacktop, Bituminous, Asphalt, 3 - Brick/Block, 4 - Slag, Gravel, Stone, 5 - Dirt, 6 - Other)	1 (1 - Daylight, 2 - Dawn, 3 - Dusk, 4 - Dark - Lighted Roadway, 5 - Dark - Roadway Not Lighted, 6 - Dark - Unknown Roadway Lighting, 7 - Glare*, 8 - Other, 9 - Unknown)	☐	☐	☐ Yes, School Bus Directly Involved; ☐ Yes, School Bus Indirectly Involved

*Secondary Condition Only

☐ Work Zone Related	Workers Present	Law Enforcement Present (Officer/Vehicle)	Law Enforcement Present (Vehicle Only)	Type of Work Zone	Location of Crash in Work Zone
	☐	☐	☐	1 - Lane Closure, 2 - Lane Shift/ Crossover, 3 - Work on Shoulder or Median, 4 - Intermittent or Moving Work, 5 - Other	1 - Before the First Work Zone Warning Sign, 2 - Advance Warning Area, 3 - Transition Area, 4 - Activity Area, 5 - Termination Area

Narrative

Unit 01 was making a right turn out of the lot for the Bellstore West Marathon gas station onto State Route 39. In the process of making the right turn the back right tires of the trailer for Unit 01 ran over a cement pole that was in place protecting a fire hydrant. Unit 01 left the scene without leaving information or contacting law enforcement. Through video at the gas station it was discovered that the company of Unit 01 was Schneider Transportation.

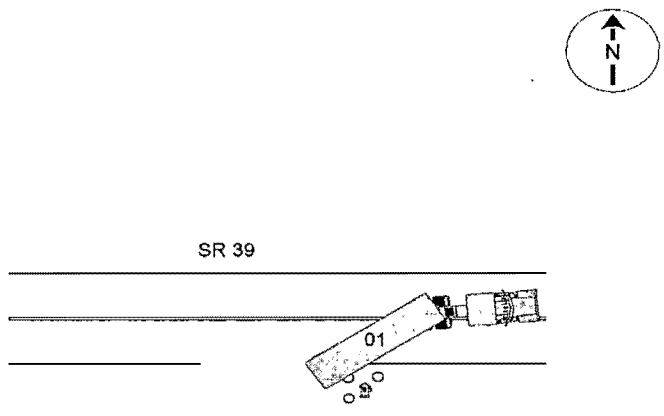

Report Taken By: ■ Police Agency ☐ Motorist

☐ Supplement (Correction or Addition to an Existing Report Sent to ODPS)

Date Crash Reported	Time Crash Reported	Dispatch Time	Arrival Time	Time Cleared	Other Investigation Time	Total Minutes
10/05/2016	1156	1210	1213	1232	30	52

Officer's Name *	Officer's Badge Number	Checked By
Brown, Kevin	108	

UNIT

LOCAL REPORT NUMBER: 16 MPD 1755

UNIT NUMBER	OWNER NAME: LAST, FIRST, MIDDLE (☐ SAME AS DRIVER)	OWNER PHONE NUMBER	DAMAGE SCALE
1	Schneider National, ,	920-592-3048	9

1 - NONE
2 - MINOR
3 - FUNCTIONAL
4 - DISABLING
9 - UNKNOWN

DAMAGE AREA: FRONT / REAR

OWNER ADDRESS: CITY, STATE, ZIP ☐ SAME AS DRIVER)
, OH

LP STATE	LICENSE PLATE NUMBER	VEHICLE IDENTIFICATION NUMBER	# OCCUPANTS
			1

VEHICLE YEAR	VEHICLE MAKE	VEHICLE MODEL	VEHICLE COLOR
0	Unknown	Unknown - UNK	

☐ PROOF OF INSURANCE SHOWN	INSURANCE COMPANY	POLICY NUMBER	TOWED BY

CARRIER NAME, ADDRESS, CITY, STATE, ZIP | CARRIER PHONE

US DOT

HM PLACARD ID NO.

HM CLASS NUMBER

VEHICLE WEIGHT GVWR/GCWR
☐ 1 - LESS THAN OR EQUAL TO 10K LBS
2 - 10,001 TO 26,000K LBS
3 - MORE THAN 26,000K LBS.

☐ HAZARDOUS MATERIAL RELATED

CARGO BODY TYPE
07
01 - NO CARGO BODY TYPE/NOT APPLICABL
02 - BUS/VAN (9-15 SEATS, INC DRIVER)
03 - BUS (16+ SEATS, INC DRIVER)
04 - VEHICLE TOWING ANOTHER VEHICLE
05 - LOGGING
06 - INTERMODAL CONTAINER CHASIS
07 - CARGO VAN/ENCLOSED BOX
08 - GRAIN, CHIPS, GRAVEL
09 - POLE
10 - CARGO TANK
11 - FLAT BED
12 - DUMP
13 - CONCRETE MIXER
14 - AUTO TRANSPORTER
15 - GARBAGE/REFUSE
99 - OTHER/UNKNOWN

TRAFFICWAY DESCRIPTION
1
1 - TWO-WAY, NOT DIVIDED
2 - TWO-WAY, NOT DIVIDED, CONTINUOUS LEFT TURN LANE
3 - TWO-WAY, DIVIDED, UNPROTECTED(PAINTED OR GRASS >4FT.) MEDIA
4 - TWO-WAY, DIVIDED, POSITIVE MEDIANBARRIER
5 - ONE-WAY TRAFFICWAY

■ HIT / SKIP UNIT

NON-MOTORIST LOCATION PRIOR TO IMPACT
01 - INTERSECTION - MARKED CROSSWAL
02 - INTERSECTION - NO CROSSWALK
03 - INTERSECTION OTHER
04 - MIDBLOCK - MARKED CROSSWALK
05 - TRAVEL LANE - OTHER LOCATION
06 - BICYCLE LANE
07 - SHOULDER/ROADSIDE
08 - SIDEWALK
09 - MEDIAN/CROSSING ISLAND
10 - DRIVEWAY ACCESS
11 - SHARED-USE PATH OR TRAIL
12 - NON-TRAFFICWAY AREA
99 - OTHER/UNKNOWN

TYPE OF USE
2
1 - PERSONAL
2 - COMMERCIAL
3 - GOVERNMENT

☐ IN EMERGENCY RESPONSE

UNIT TYPE
17
99 - UNKNOWN OR HIT/SKIP

PASSENGER VEHICLES (LESS THAN 9 PASSENGERS MED/HEAVY TRUCKS OR COMBO UNITS > 10K LBS BUS/VAN/LIMO(9 OR MORE INCLUDING DRIVER)
01 - SUB-COMPACT
02 - COMPACT
03 - MID SIZE
04 - FULL SIZE
05 - MINIVAN
06 - SPORT UTILITY VEHICLE
07 - PICKUP
08 - VAN
09 - MOTORCYCLE
10 - MOTORIZED BICYCLE
11 - SNOWMOBILE/ATV
12 - OTHER PASSENGER VEHICLE
13 - SINGLE UNIT TRUCK OR VAN 2AXLE, 6 TIRES
14 - SINGLE UNIT TRUCK ; 3+ AXLES
15 - SINGLE UNIT TRUCK / TRAILER
16 - TRUCK/TRACTOR (BOBTAIL)
17 - TRACTOR/SEMI-TRAILER
18 - TRACTOR/DOUBLE
19 - TRACTOR/TRIPLES
20 - OTHER MED/HEAVY VEHICLE
21 - BUS/VAN (9-15 SEATS, INC DRIVER)
22 - BUS (16+ SEATS, INC DRIVER)

NON-MOTORIST
23 - ANIMAL WITH RIDER
24 - ANIMAL WITH BUGGY, WAGON, SURREY
25 - BICYCLE/PEDACYCLIST
26 - PEDESTRIAN/SKATER
27 - OTHER NON-MOTORIST

☐ HAS HM PLACARD

SPECIAL FUNCTION
01
01 - NONE
02 - TAXI
03 - RENTAL TRUCK (OVER 10K LBS)
04 - BUS - SCHOOL (PUBLIC OR PRIVATE)
05 - BUS - TRANSIT
06 - BUS - CHARTER
07 - BUS - SHUTTLE
08 - BUS - OTHER
09 - AMBULANCE
10 - FIRE
11 - HIGHWAY/MAINTENANCE
12 - MILITARY
13 - POLICE
14 - PUBLIC UTILITY
15 - OTHER GOVERNMENT
16 - CONSTRUCTION EQIP.
17 - FARM VEHICLE
18 - FARM EQUIPMENT
19 - MOTORHOME
20 - GOLF CART
21 - TRAIN
22 - OTHER (EXPLAIN IN NARRATIVE)

MOST DAMAGED AREA
99
01 - NONE
02 - CENTER FRONT
03 - RIGHT FRONT
04 - RIGHT SIDE
05 - RIGHT REAR
06 - REAR CENTER
07 - LEFT REAR
08 - LEFT SIDE
09 - LEFT FRONT
10 - TOP AND WINDOWS
11 - UNDERCARRIAGE
12 - LOAD/TRAILER
13 - TOTAL (ALL AREAS)
14 - OTHER
99 - UNKNOWN

IMPACT ARE
12

ACTION
3
1 - NON-CONTACT
2 - NON-COLLISION
3 - STRIKING
4 - STRUCK
5 - STRIKING/STRUCK
9 - UNKNOWN

PRE-CRASH ACTIONS
05
99 - UNKNOWN

MOTORIST
01 - STRAIGHT AHEAD
02 - BACKING
03 - CHANGING LANES
04 - OVERTAKING/PASSING
05 - MAKING RIGHT TURN
06 - MAKING LEFT TURN
07 - MAKING U-TURN
08 - ENTERING TRAFFIC LANE
09 - LEAVING TRAFFIC LANE
10 - PARKED
11 - SLOWING OR STOPPED IN TRAFFIC
12 - DRIVERLESS
13 - NEGOTIATING A CURVE
14 - OTHER MOTORIST ACTIO

NON-MOTORIST
15 - ENTERING OR CROSSING SPECIFIED LOCATIO
16 - WALKING,RUNNING, JOGGING, PLAYING, CYCLING
17 - WORKING
18 - PUSHING VEHICLE
19 - APPROACHING OR LEAVING VEHICLE
20 - STANDING
21 - OTHER NON-MOTORIST ACTION

CONTRIBUTING CIRCUMSTANCE

PRIMARY
07

SECONDARY

99 - UNKNOWN

MOTORIST
01 - NONE
02 - FAILURE TO YIELD
03 - RAN RED LIGHT
04 - RAN STOP SIGN
05 - EXCEEDED SPEED LIMIT
06 - UNSAFE SPEED
07 - IMPROPER TURN
08 - LEFT OF CENTER
09 - FOLLOWED TOO CLOSELY/ACDA
10 - IMPROPER LANE CHANGE /PASSING/OFF ROAD
11 - IMPROPER BACKING
12 - IMPROPER START FROM PARKED POSITION
13 - STOPPED OR PARKED ILLEGALLY
14 - OPERATING VEHICLE IN NEGLIGENT MANNER
15 - SWERING TO AVOID (DUE TO EXTERNAL CONDITIONS)
16 - WRONG SIDE/WRONG WAY
17 - FALURE TO CONTROL
18 - VISION OBSTRUCTION
19 - OPERATING DEFECTIVE EQUIPMENT
20 - LOAD SHIFTING/FALLING/SPILLING
21 - OTHER IMPROPER ACTION

NON-MOTORIST
22 - NONE
23 - IMPROPER CROSSING
24 - DARTING
25 - LYING AND/OR ILLEGALLY IN ROADWAY
26 - FALURE TO YIELD RIGHT OF WAY
27 - NOT VISIBLE (DARK CLOTHING)
28 - INATTENTIVE
29 - FAILURE TO OBEY TRAFFIC SIGNS /SIGNALS/OFFICER
30 - WRONG SIDE OF THE ROAD
31 - OTHER NON-MOTORIST ACTION

VEHICLE DEFECTS
01 - TURN SIGNALS
02 - HEAD LAMPS
03 - TAIL LAMPS
04 - BRAKES
05 - STEERING
06 - TIRE BLOWOUT
07 - WORN OR SLICK TIRES
08 - TRAILER EQUIPMENT DEFECTIVE
09 - MOTOR TROUBLE
10 - DISABLED FROM PRIOR ACCIDENT
11 - OTHER DEFECTS

SEQUENCE OF EVENTS
1 41 2 3 4 5 6
FIRST HARMFUL EVENT 1
MOST HARMFUL EVENT 1
99 - UNKNOWN

NON-COLLISION EVENTS
01 - OVERTURN/ROLLOVER
02 - FIRE/EXPLOSION
03 - IMMERSION
04 - JACKKNIFE
05 - CARGO/EQUIPMENT LOSS OR SHIFT
06 - EQUIPMENT FAILURE (BLOWN TIRE, BRAKE FAILURE, ETC)
07 - SEPARATION OF UNITS
08 - RAN OFF ROAD RIGHT
09 - RAN OFF ROAD LEFT
10 - CROSS MEDIAN
11 - CROSS CENTER LINE OPPOSITE DIRECTION OF TRAVEL
12 - DOWNHILL RUNAWAY
13 - OTHER NON-COLLISION

COLLISION WITH PERSON, VEHICLE OR OBJECT NOT FIXED
14 - PEDESTRIAN
15 - PEDALCYCLE
16 - RAILWAY VEHICLE (TRAIN, ENGINE)
17 - ANIMAL - FARM
18 - ANIMAL - DEER
19 - ANIMAL -OTHER
20 - MOTOR VEHICLE IN TRANSPORT
21 - PARKED MOTOR VEHICLE
22 - WORK ZONE MAINTENANCE EQUIPMENT
23 - STRUCK BY FALLING, SHIFTING CARGO OR ANYTHING SET IN MOTION BY A MOTOR VEHICLE
24 - OTHER MOVABLE OBJECT

COLLISION WITH FIXED, OBJECT
25 - IMPACT ATTENUATOR/CRASH CUSHION
26 - BRIDGE OVERHEAD STRUCTURE
27 - BRIDGE PIER OR ABUTMENT
28 - BRIDGE PARAPET
29 - BRIDGE RAIL
30 - GUARDRAIL FACE
31 - GUARDRAILEND
32 - PORTABLE BARRIER
33 - MEDIAN CABLE BARRIER
34 - MEDIAN GUARDRAIL BARRIER
35 - MEDIAN CONCRETE BARRIER
36 - MEDIAN OTHER BARRIER
37 - TRAFFIC SIGN POST
38 - OVERHEAD SIGN POST
39 - LIGHT/LUMINARIES SUPPORT
40 - UTILITY POLE
41 - OTHER POST, POLE OR SUPPORT
42 - CULVERT
43 - CURB
44 - DITCH
45 - EMBANKMENT
46 - FENCE
47 - MAILBOX
48 - TREE
49 - FIRE HYDRANT
50 - WORK ZONE MAINTENANCE EQUIPMENT
51 - WALL, BUILDING, TUNNEL
52 - OTHER FIXED OBJECT

UNIT SPEED
10
☐ STATED
■ ESTIMATED

POSTED SPEED

TRAFFIC CONTROL
01
01 - NO CONTROLS
02 - STOP SIGN
03 - YIELD SIGN
04 - TRAFFIC SIGNAL
05 - TRAFFIC FLASHERS
06 - SCHOOL ZONE
07 - RAILROAD CROSSBUCKS
08 - RAILROAD FLASHERS
09 - RAILROAD GATES
10 - COSTRUCTION BARRICADE
11 - PERSON (FLAGGER, OFFICER
12 - PAVEMENT MARKINGS
13 - CROSSWALK LINES
14 - WALK/DON'T WALK
15 - OTHER
16 - NOT REPORTED

UNIT DIRECTION
FROM 2 TO 3
1 - NORTH
2 - SOUTH
3 - EAST
4 - WEST
5 - NORTHEAST
6 - NORTHWEST
7 - SOUTHEAST
8 - SOUTHWEST
9 - UNKNOWN

MOTORIST / NON-MOTORIST / OCCUPANT

Local Report Number: 16 MPD 1755

Motorist/Non-Motorist

Unit Number	Name: Last, First, Middle	Date of Birth	Age	Gender
1	Unknown,			☐ F - Female M - Male

Address, City, State, Zip: , OH

Contact Phone - Include Area Code:

Injuries	Injured Taken By	EMS Agency	Medical Facility Injured Taken To	Safety Equipment Used	DOT Compliant Motorcycle Helmet	Seating Position	Air Bag Usage	Ejection	Trapped
1	1			99	☐	01	9	1	1

OL State	Operator License Number	OL Class	No Valid DL	M/C End	Condition	Alcohol/Drug Suspected	Alcohol Test Status	Alcohol Test Type	Alcohol Test Value	Drug Test Status	Drug Test Type
			☐	☐	7	1	1	1		1	1

Offense Charged (☐ Local Code)	Offense Description	Citation Number	Hands-Free Device Used	Driver Distracted By
			☐	1 ☐

Motorist/Non-Motorist

Unit Number	Name: Last, First, Middle	Date of Birth	Age	Gender
				☐ F - Female M - Male

Address, City, State, Zip:

Contact Phone - Include Area Code:

Injuries	Injured Taken By	EMS Agency	Medical Facility Injured Taken To	Safety Equipment Used	DOT Compliant Motorcycle Helmet	Seating Position	Air Bag Usage	Ejection	Trapped
☐	☐				☐	☐	☐	☐	☐

OL State	Operator License Number	OL Class	No Valid DL	M/C End	Condition	Alcohol/Drug Suspected	Alcohol Test Status	Alcohol Test Type	Alcohol Test Value	Drug Test Status	Drug Test Type
		☐	☐	☐	☐	☐	☐	☐			

Offense Charged (☐ Local Code)	Offense Description	Citation Number	Hands-Free Device Used	Driver Distracted By
			☐	☐ ☐

Injuries
1 - No Injury / None Reporte
2 - Possible
3 - Non-Incapacitating
4 - Incapacitating
5 - Fatal

Injured Taken By
1 - Not Transported / Treated at Scene
2 - EMS
3 - Police
4 - Other
9 - Unknown

Safety Equipment Used — 99 - Unknown Safety Equipment

Motorist
01 - None Used - Vehicle Occupant
02 - Shoulder Belt Only Used
03 - Lap Belt Only Used
04 - Shoulder And Lap Belt Only Used
05 - Child Restraint System-Forward Facing
06 - Child Restraint System-Rear Facing
07 - Booster Seat
08 - Helmet Used

Non-Motorist
09 - None Used
10 - Helmet Used
11 - Protective Pads Used (Elbows, Knees, Etc)
12 - Reflective Coating
13 - Lighting
14 - Other

Seating Position
01 - Front - Left Side (Motorcycle Driver)
02 - Front - Middle
03 - Front - Right Side
04 - Second - Left Side (Motorcycle Passenger)
05 - Second - Middle
06 - Second - Right Side
07 - Third - Left Side (Motorcycle Side Car)
08 - Third - Middle
09 - Third - Right Side
10 - Sleeper Section of Cab (Truck)
11 - Passenger in Other Enclosed Cargo Area (Non-Trailing Unit Such as a Bus, Pickup with Cap)
12 - Passenger in Unenclosed Cargo Area
13 - Trailing Unit
14 - Riding on Vehicle Exterior (Non-Trailing Unit)
15 - Non-Motorist
16 - Other
99 - Unknown

Air Bag Usage
1 - Not Deployed
2 - Deployed Front
3 - Deployed Side
4 - Deployed Both Front/Side
5 - Not Applicable
9 - Deployment Unknown

Ejection
1 - Not Ejected
2 - Totally Ejected
3 - Partially Ejected
4 - Not Applicable

Trapped
1 - Not Trapped
2 - Extricated by Mechanical Means
3 - Extricated by Non-Mechanical Means

Operator License Class
1 - Class A
2 - Class B
3 - Class C
4 - Regular Class (Ohio's "D")
5 - MC/Moped Only

Condition
1 - Apparently Normal
2 - Physical Impairment
3 - Emotional (Depressed, Angry, Disturbe
4 - Illness
5 - Fell Asleep, Fainted, Fatigue
6 - Under The Influence of Medications, Drugs, Alcohol
7 - Other

Alcohol/Drug Suspected
1 - None
2 - Yes - Alcohol Suspected
3 - Yes - Hbd Not Impaired
4 - Yes - Drugs Suspected
5 - Yes - Alcohol and Drugs Suspected

Alcohol Test Status
1 - None Given
2 - Test Refused
3 - Test Given, Contaminated Sample/Unusabl
4 - Test Given, Results Known
5 - Test Given, Results Unknown

Alcohol Test Type
1 - None
2 - Blood
3 - Urine
4 - Breath
5 - Other

Drug Test Status
1 - None Given
2 - Test Refused
3 - Test Given, Contaminated Sample/Unusabl
4 - Test Given, Results Known
5 - Test Given, Results Unknown

Drug Test Type
1 - None
2 - Blood
3 - Urine
4 - Other

Driver Distracted By
1 - No Distraction Reported
2 - Phone
3 - Texting /Emailing
4 - Elctronic Communication Device
5 - Other Electronic Device (Navigation Device, Radio, DVD)
6 - Other Inside The Vehicle
7 - External Distraction

Occupant

Unit Number	Name: Last, First, Middle	Date of Birth	Age	Gender
				☐ F - Female M - Male

Address, City, State, Zip:

Contact Phone - Include Area Code:

Injuries	Injured Taken By	EMS Agency	Medical Facility Injured Taken To	Safety Equipment Used	DOT Compliant Motorcycle Helmet	Seating Position	Air Bag Usage	Ejection	Trapped
☐	☐				☐	☐	☐	☐	☐

Occupant

Unit Number	Name: Last, First, Middle	Date of Birth	Age	Gender
				☐ F - Female M - Male

Address, City, State, Zip:

Contact Phone - Include Area Code:

Injuries	Injured Taken By	EMS Agency	Medical Facility Injured Taken To	Safety Equipment Used	DOT Compliant Motorcycle Helmet	Seating Position	Air Bag Usage	Ejection	Trapped
☐	☐				☐	☐	☐	☐	☐